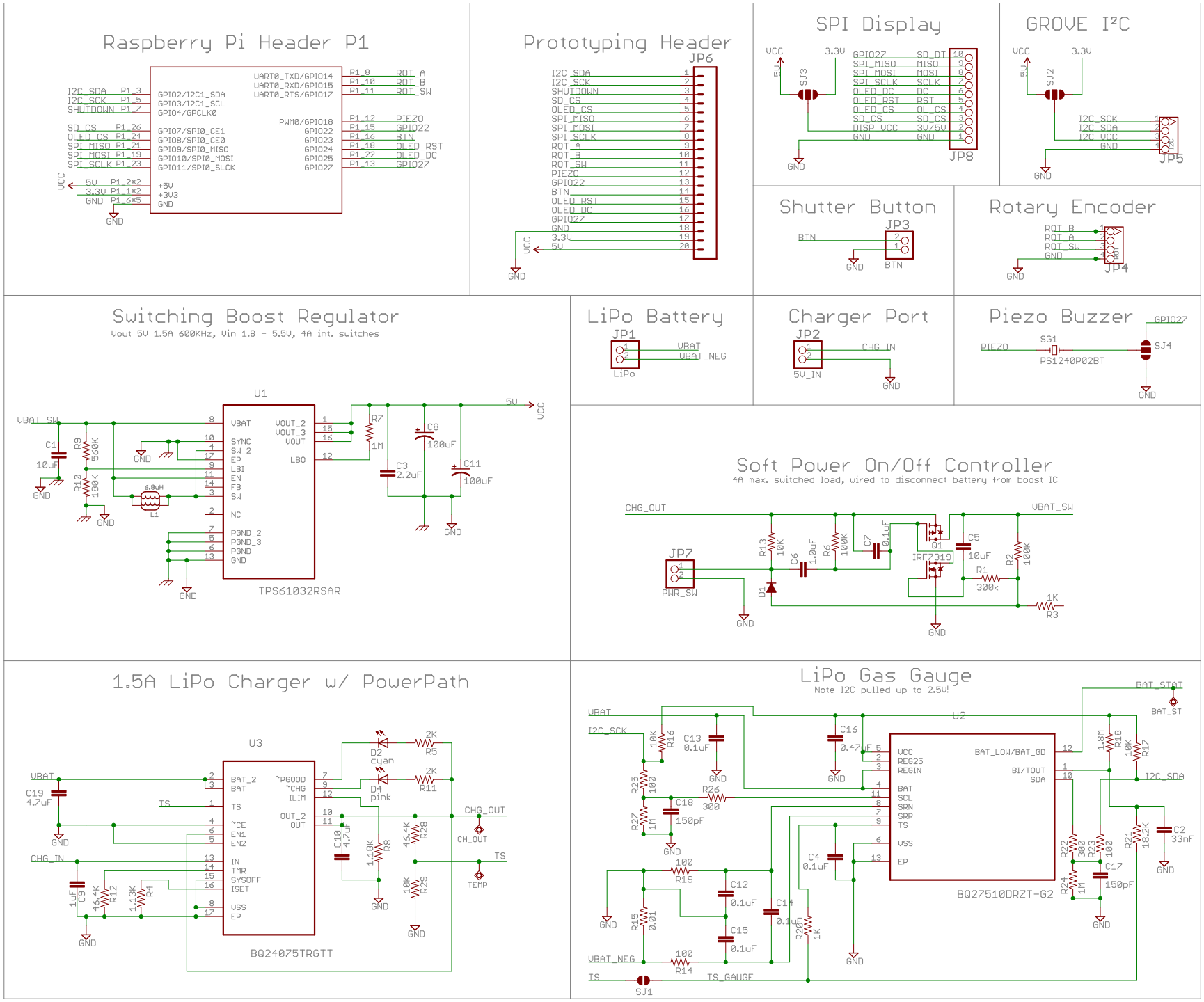
Raspberry Pi Header P1
Prototyping Header
JP6
SPI Display
JP8
GROVE I²C
JP5
Shutter Button
JP3
Rotary Encoder
JP4
Switching Boost Regulator
Vout 5V 1.5A 600KHz, Vin 1.8 - 5.5V, 4A int. switches
U1
TPS61032RSAR
LiPo Battery
JP1
Charger Port
JP2
Piezo Buzzer
SG1
PS1240P02BT
SJ4
Soft Power On/Off Controller
4A max. switched load, wired to disconnect battery from boost IC
JP7
PWR_SW
IRF7319
1.5A LiPo Charger w/ PowerPath
U3
BQ24075TRGTT
LiPo Gas Gauge
Note I2C pulled up to 2.5V!
U2
BQ27510DRZT-G2
SJ1