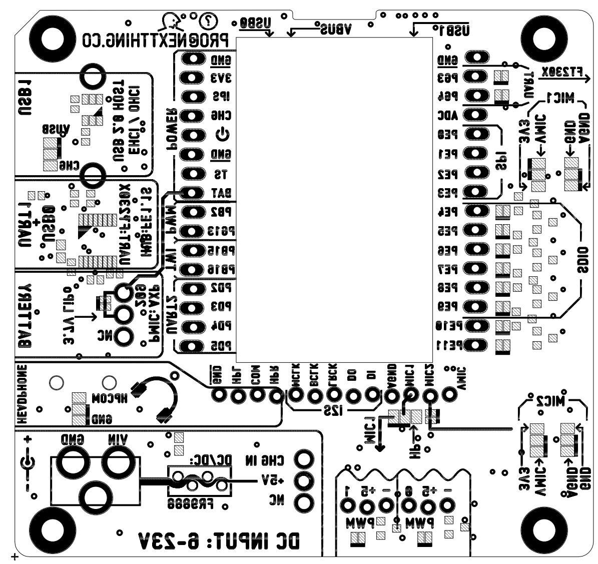Bottom Silkscreen