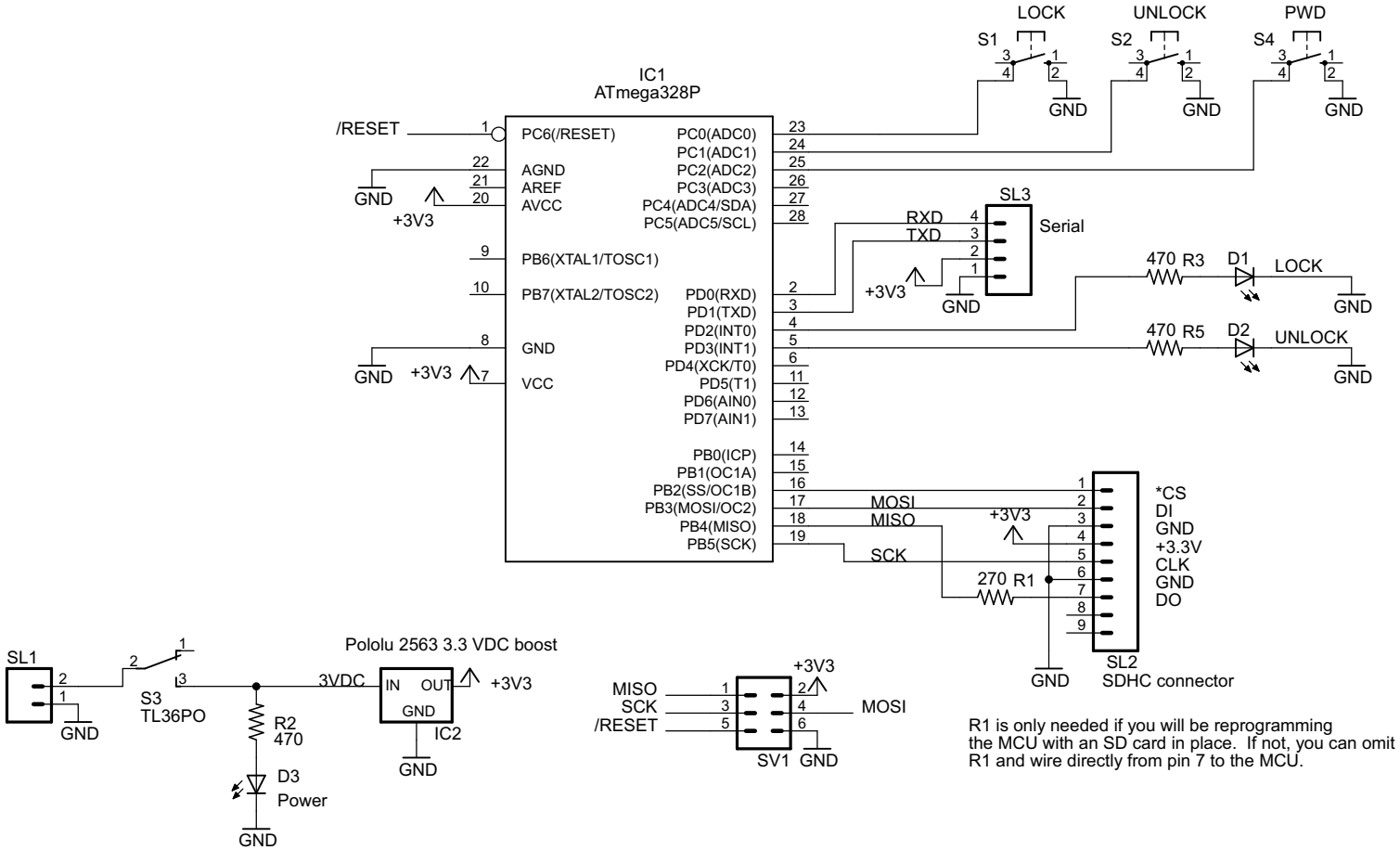


R1 is only needed if you will be reprogramming the MCU with an SD card in place. If not, you can omit R1 and wire directly from pin 7 to the MCU.

# SD card locker, version 2

| | |
|---|---|
| TITLE: | |
| Document Number: sdlocker2.sch | REV: |
| Date: | Sheet: |